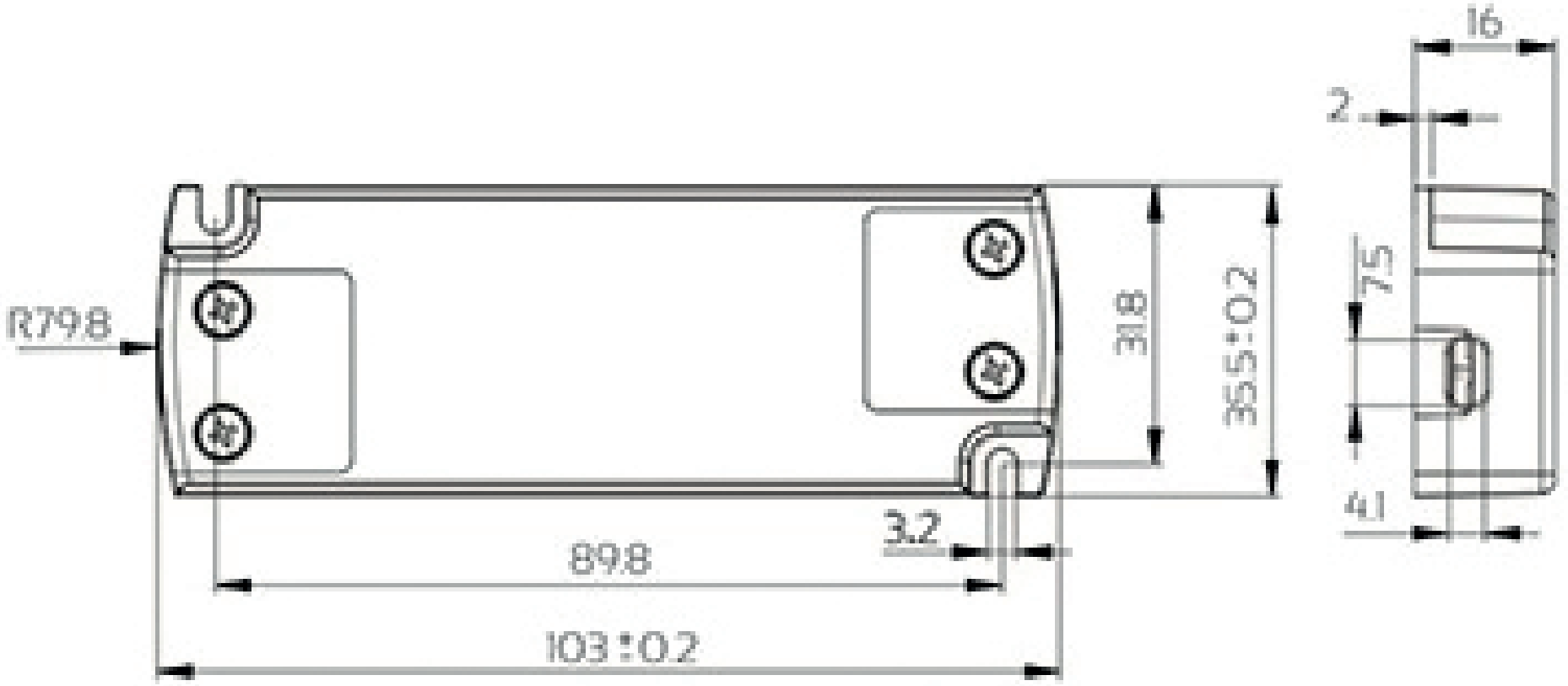
16
2
R79.8
31.8
35.5±0.2
7.5
4.1
3.2
89.8
103±0.2