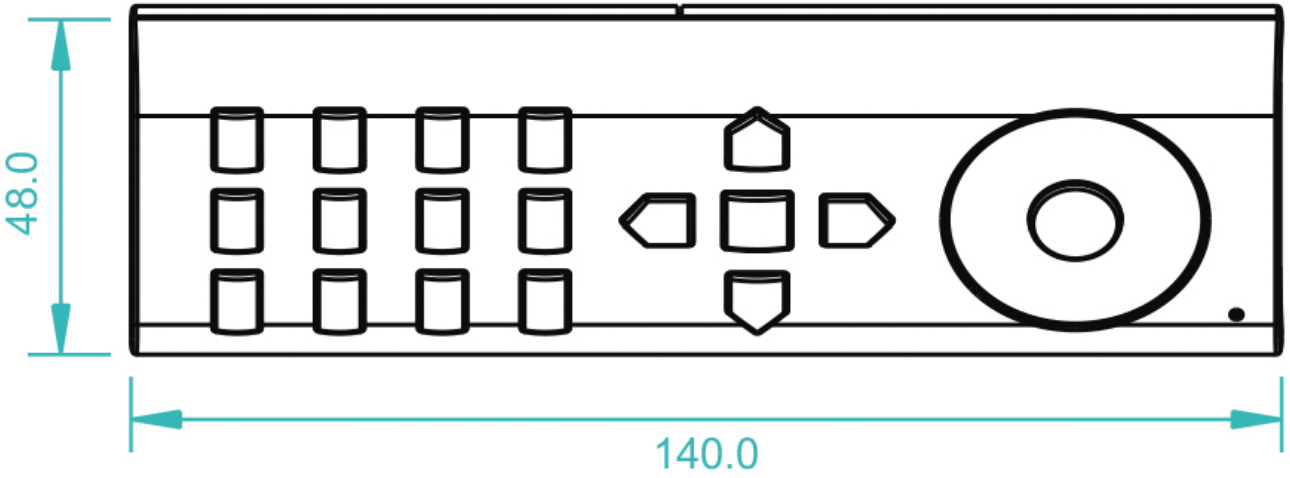
48.0
140.0

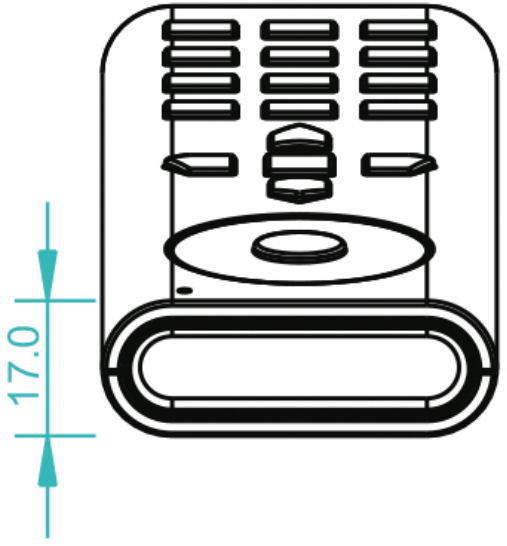
17.0