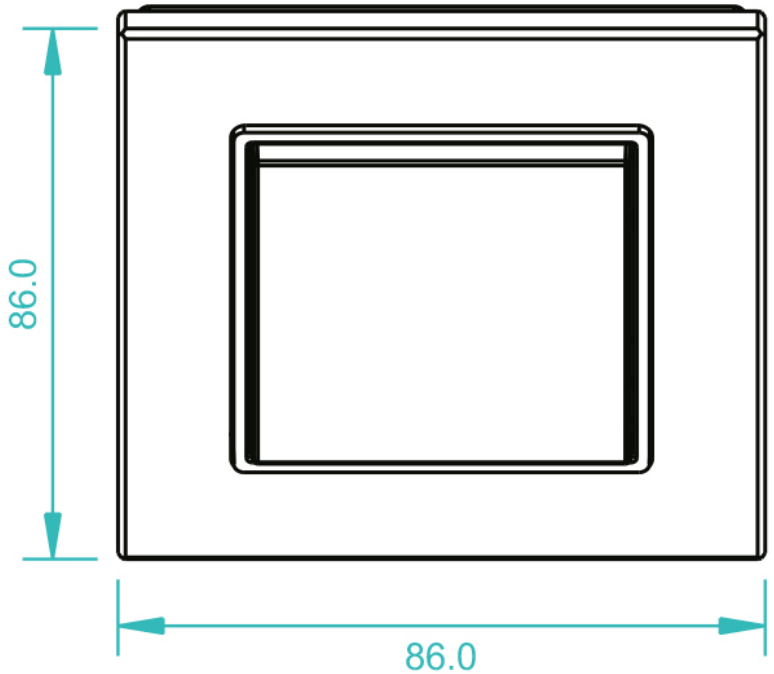
86.0
86.0

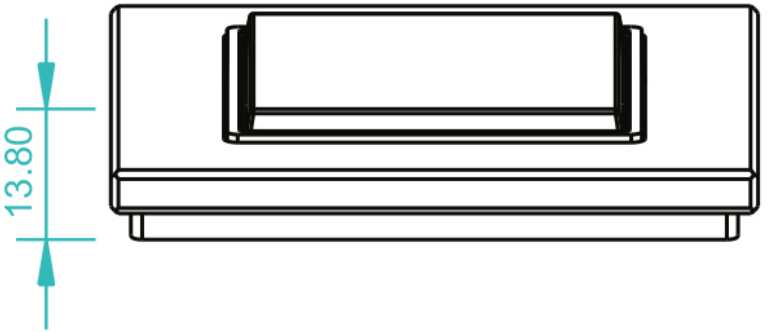
13.80