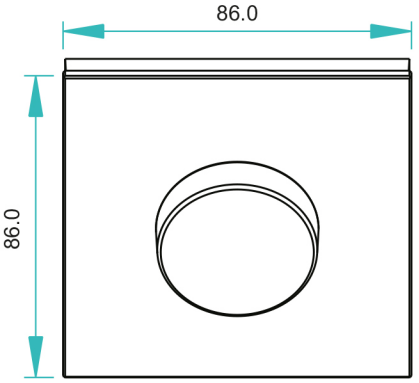
86.0
86.0

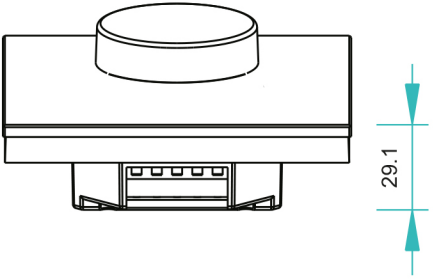
29.1