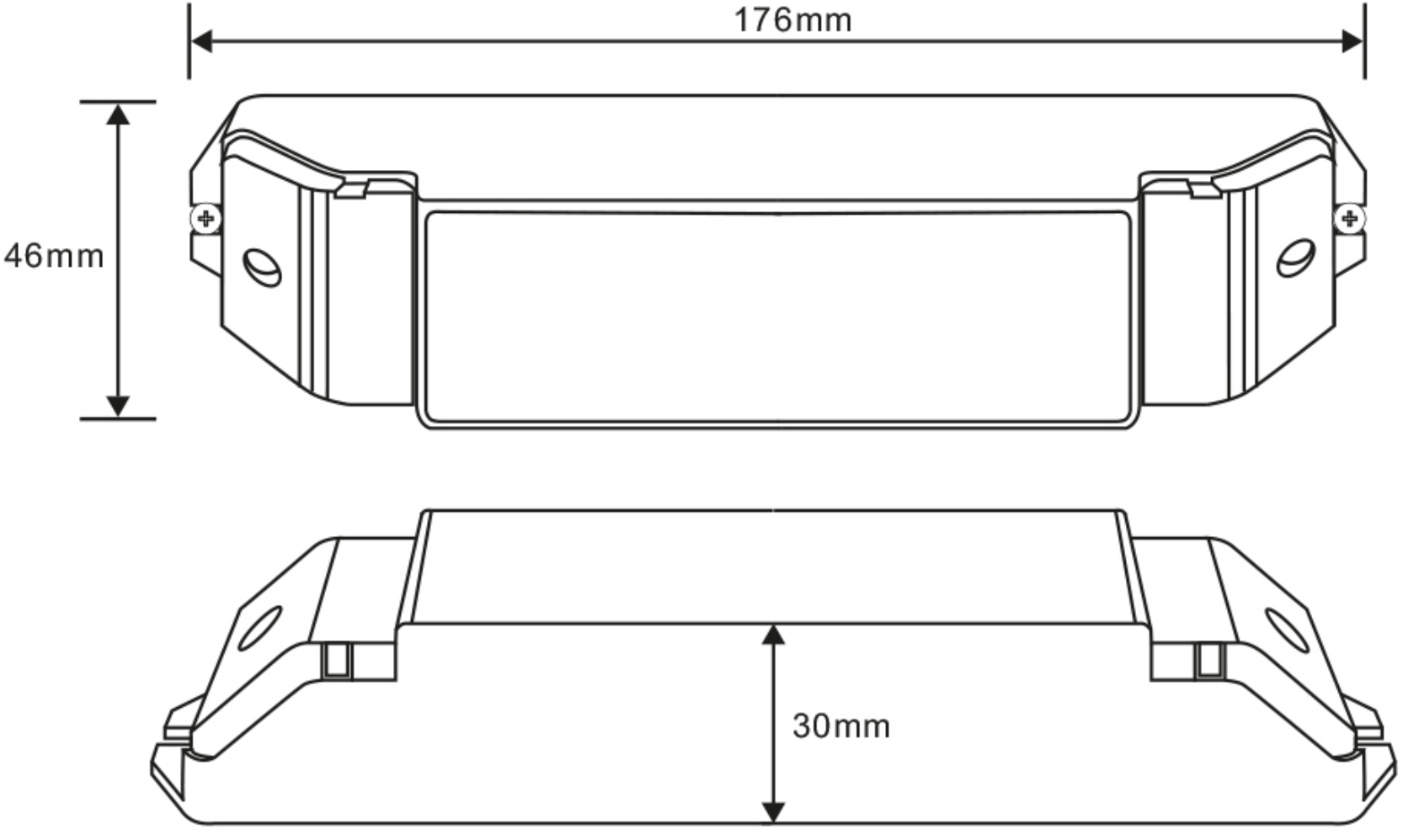
176mm
46mm
30mm