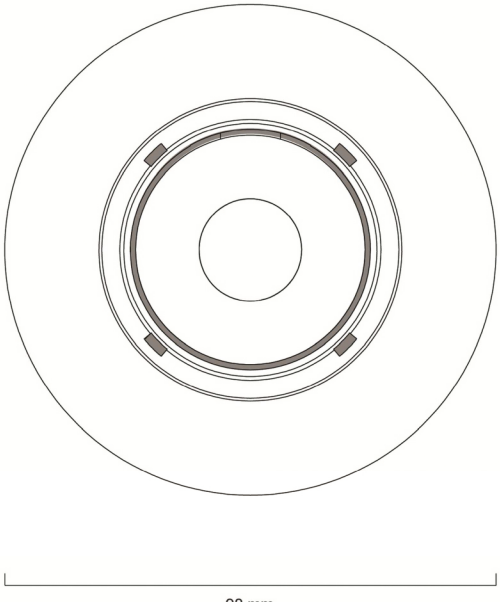
98 mm

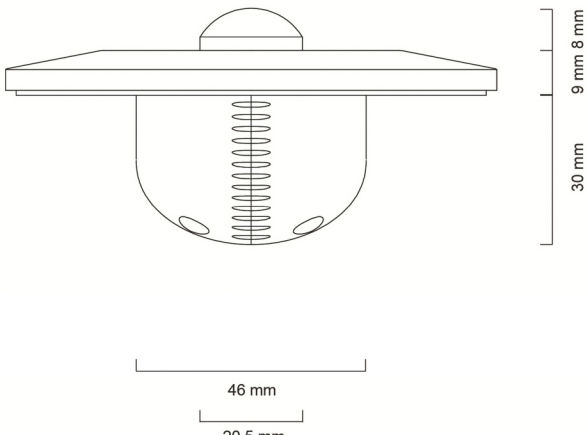
8 mm
9 mm
30 mm
46 mm
20,5 mm